27th Annual Conference of the Canadian Nuclear Society
Toronto, Ontario, Canada (2006, June 11-14)

Loss of Coolant Accident (LOCA) Analysis for McMaster Nuclear Reactor through Probabilistic Risk Assessment (PRA)

Taesung Ha, William J. Garland
Dept of Eng. Physics, McMaster University, 1280 Main St. W.
Hamilton, Ontario, Canada L8S 4L7 hats@mcmaster.ca

ABSTRACT

A probabilistic risk assessment (PRA) was conducted for the loss of coolant accident (LOCA) sequence in the McMaster Nuclear Reactor (MNR). A level 1 PRA was completed including event sequence modeling, system modeling, and quantification. To support the quantification of the accident sequence identified, data analysis using the Bayesian method and human reliability analysis (HRA) using the ASEP approach were performed. Since human performance in research reactors is significantly different from that in power reactors, a different time-oriented HRA model was proposed and applied for the estimation of the human error probability (HEP) of core relocation. This HEP estimate was less than that by the ASEP approach by a factor of about 2. These two HEP estimates were used for sensitivity analysis, and modeling uncertainty in the PRA models was quantified. This showed the necessity of appropriate human reliability models in PRA for research reactors. This method could be implemented for the operators' actions which require extensive manual execution with little cognitive load, as might be the case for some maintenance operations in power reactors.

Acronyms

ASEP: Accident Sequence Evaluation Procedure
EWMU: Emergency Water Make-Up
GOF: Goodness-Of-Fit
HEP: Human Error Probability
HCR: Human Cognitive Reliability
HRA: Human Reliability Analysis
LOCA: Loss of Coolant Accident
MCS: Minimum Cut-Set
MNR: McMaster Nuclear Reactor
PDF: Probability density function
PRA: Probabilistic Risk Assessment
PSF: Performance Shaping Factor
RSM: Response Surface Method
SSC: Structure, System, and Component
THERP: Technique for Human Error Rate Prediction
TRC: Time-Reliability Correlation

1. Introduction

Since the probabilistic safety study (WASH-1400) for nuclear reactors in the US was published in 1975 [1], probabilistic risk analysis (PRA, or probabilistic safety analysis, PSA) has become acknowledged as a potential tool because it can provide the quantitative estimates of the risks associated with complex engineered systems and highlight the weak components in their operations in terms of safety. This method has been applied for the reactor safety studies in numerous reactors around the world, and was also used in the safety studies for chemical process facilities, waste repositories, and space systems. It is an integrated safety analysis methodology that incorporates various information about plant design, operational practices, operating history, component and system reliability, human performance, etc in as realistic matter as possible. However, it still needs further research in the analysis of the validity of reliability data, and in the specific modeling needs of low-power and shutdown operation and HRA (especially handling error of commission).

In the present study, a level 1 PRA for the LOCA in the MNR was conducted. To support the analysis, accident sequence analysis, system modeling, and their quantification were completed using the event and fault tree method. For quantification, detailed data analysis was performed by the Bayesian method, and HRA for the important human actions identified was conducted by the accident sequence evaluation procedure (ASEP) approach. Since the operator actions in research reactors are significantly different from those in power reactors, a different HRA approach (time-oriented model) was proposed. For implementation of this method, two important quantities of the phenomenological time and operator performance time were estimated by a best estimate method (RSM) and from interviews, respectively. The probability distributions were assigned to describe these two random variables and tested for the adequacy of their fitting by goodness-of-fit technique. The human error probability (HEP) for core relocation was estimated using the proposed method with these two competing quantities. This HEP estimate was used for sensitivity analysis and quantification of HRA modeling uncertainty in the PRA models.

2. McMaster Nuclear Reactor Background

The McMaster Nuclear Reactor (MNR) is a pool type reactor used for research and isotope production purposes, and licensed for operation up to a maximum power of 5 MegaWatt thermal (MW). The reactor is currently operated at 3 MW with low enriched uranium fuel moderated by gravity-driven light water. A schematic flow sheet of the MNR primary heat transport system is shwon in Figure 1. The MNR is composed of seven major parts: two adjacent reactor pools, a reactor core, one hold-up tank, one circulating pump, one heat exchanger, several gate valves and check valves, and connecting piping of several different diameters. The reactor core is located near the bottom of pool 1. Coolant flow is generated by the pressure difference (≈70 kPa) between the reactor core and the hold-up tank. Coolant flows through the reactor core from top to bottom, through the grid plate into a plenum to the core outlet pipe, and then into the holdup tank. Subsequently, the water is drawn from the holdup tank by the primary pump and returned to the pool through the shell of the heat exchanger. Pool 1 and 2 are adjoined with a removable gate; thus the reactor core can be moved to pool 2 and the pool gate could be installed between these pools, effectively isolating the core from a LOCA if needed. The valves in the operational line are used to adjust the flow through the core. A manual valve on a bypass line from the heat exchanger primary outlet to the primary pump suction header is adjusted to maintain the pool level above the gutters. The fuel is under more than 7 m of coolant and the significant margins to onset of boiling are backed by early reactor trips at low level and low flow through the core. When the reactor is shut down in a normal occurrence, valves 10 and 12 are normally closed after the primary pump is stopped. This is executed manually on a daily basis.

3. Methodology overview

To quantify the risk associated to the nuclear reactor operation by PRA method, two consequence measures are generally calculated: core damage frequency or off-site health effect. Level 1 PRA is required for core damage frequency quantification while a full three level PRA is required for quantification of off-site health effect. Since only level 1 PRA was performed in the present study, core damage frequency was quantified without further analysis of radioactive material behavior within containment (level 2) and outside the containment (level 3). In level 1 PRA, the events that may challenge plant operation must be determined. The plant response to these events (accident sequences) is identified and the frequencies of these sequences are quantified. For these analyses, plant familiarization should be done first (usually by performing plant visit, preliminary plant analysis, etc). The information related to the design and operation of the plant including procedures of emergency operation, test and maintenance, training materials, etc, must be obtained. These provide necessary information for

subsequent analyses. For a more detailed discussion about the methodology, refer to the companion paper [2].

Figure 2 shows the scope and methodology of the present study. For a reference accident scenario in the MNR (LOCA), a full level 1 PRA was conducted (section 4) with initiating event, accident sequence analysis, system modeling, and the quantification of the accident sequences properly identified. To support the quantification, data analysis, human reliability analysis, and statistical uncertainty analysis were completed. Since the human performance in research reactors is significantly different from that in power reactors, a different HRA method (time-oriented model) was developed (section 5). This model uses the simple concept that the success or failure of human performance in any circumstances is determined by the time taken by the operators to accomplish a required action and the time available for that performance (see Figure 3)**.** These two competing variables are determined by the best estimate method and interviews. Appropriate probability distributions were assigned to describe these variables, and the adequacy of their fitting was tested by statistical tools (i.e., Komogorov-Smirnov (KS) test and Anderson-Darling (AD) test of goodness-of-fit technique). The HEP was estimated from the probability distributions using the proposed HRA model. It was used for sensitivity analysis and modeling uncertainty in the PRA model from different HRA models.

4. Case study: LOCA

Among several postulated initiating events that could challenge the safety limits of the plants based on initiating event analysis, a loss of coolant accident (LOCA) was chosen as a reference accident scenario. It is one of the typical internal initiating events. There could be several primary causes to initiate a LOCA in the MNR: breaks in the piping system, concrete wall failures of the reactor pool, and beam tube failures in the pool by falling heavy materials. The MNR safety assessment report (SAR) 2002 [3] studied these individual initiators for a LOCA. It concluded that the only conceivable and risk-significant initiator is a beam tube rupture by some falling heavy material during operation and shut-down state; the others are inconsequential since they allow more than 7 hours for accident mitigation, regardless of break' locations and system configuration. To be conservative, the present study will thus investigate the LOCA induced only by beam tube rupture during operation. Normally, even a beam tube rupture would not lead to a LOCA since the tubes are isolated from the pool water by a protective cover plate. This plate is only ever removed during beam tube maintenance, during which the reactor is shutdown and crane operation over the pool is prohibited. Hence the initiating event frequency is very low indeed.

4.1 Accident sequence development (event tree) and system modeling (fault tree)

Following this initiating event, different possible accident sequences corresponding to beam tube rupture were developed. These sequence analysis would delineate the possible combinations of safety system function successes and failures. This could result in either successful mitigation of the events or an undesired state of the plant which was defined as core uncovery (coolant level below the top of the active fuel) in the MNR. Note that this definition is very conservative since the core uncovery in the MNR does not lead to core damage or melting immediately. Figure 4 shows a simple functional event tree for LOCA. Only two mitigating systems are capable of cooling the reactor core, given a LOCA. One is the core relocation and the other is its recovery action of adding emergency water to cover the core. Note that core relocation can be achieved by moving the reactor core from the pool 1 to the pool 2 and installing a water-tight pool gate between the pools (see Figure 1); this operation is practiced biannually. To determine the success/failure of these systems, a deterministic thermal-hydraulic code MNRSIM [4] was run. Four accident sequences have been identified. Sequence three is the only one of the three which would lead to core uncovery. The frequency for each sequence is estimated from the unavailability of the top events, which can be evaluated from system modeling. For a full description of the system modeling for reactor shutdown, core relocation, and recovery, see Reference 5.

4.2 Human Reliability Analysis

From the event and fault trees of system analysis, key human interactions were identified. To analyze these operator actions, HRA was performed by the steps suggested in the systematic human acting reliability procedure (SHARP) [6]. Plant familiarization task was conducted to gain an understanding of the LOCA process and how it can be expected to be terminated. From this plant familiarization, several post-accident actions were identified: manual reactor scram in the case that the automatic reactor scram fails, pool isolation by closing remote butterfly valve V1 and gate valve V3, and core relocation and the recovery action of adding emergency water to the pool in the case that core relocation fails with adequate time available (emergency water make-up (EWMU)). Based on this information, a detailed task analysis of each action was performed. A task analysis elicits all the tasks and performance shaping factors (PSFs) including task description, task purpose, information requirements, time requirements, communications, tools and materials requirements, training provided, and feedback of success. The task lists for the LOCA sequence (so-called sequence-specific task lists) are elicited from this task analysis. The relevant tasks were selected, and several transient subtasks were inserted.

For quantification of key human reliability, the technique for human error rate prediction (THERP) [7] and its simplified version, the accident sequence evaluation program (ASEP) [8], could be generally implemented. Basically, the THERP decomposes the task under consideration into elementary subtasks, and for each subtask the appropriate HEP is obtained from the tables in the THERP handbook. This nominal HEP is modified according to the influence of the most relevant PSFs in the task studied. Then the HEPs of all the subtasks are recombined in fault or event trees to model whole the task. This approach may be appropriate to apply to simple and straightforward tasks but it was difficult to quantify the HEPs for transient or complicated tasks since some of their nominal HEPs may not be available in the tables in the handbook. Therefore the more conservative but simpler approach, the ASEP technique, was selected for HEP quantification for the major subtasks of manual shutdown, core relocation, and its recovery of EWMU.

4.3 Quantification

In the PRA model with its event tree and fault tree analysis method, Boolean expressions containing minimum cut-sets (MCSs) are generally used to quantify the frequency of each accident sequence. Here MCSs are the smallest combinations of basic events which lead to the top event occurrence if they all occur. They are usually determined through rare-event approximation by setting a certain truncation cutoff level; it is recommended to be set at less than 10^{-4} below baseline core damage frequency. These MCSs are of great significance for quantification in PRA since they are used to quantify the frequencies of accident sequences and also for uncertainty analysis. A total of 24 MCSs were determined using FaultTree+ 6.05™ from Isograph Ltd [9]; note that only two among these MCSs account for about 90% of the total core uncovery frequency. It also supplements 20,000 runs of Monte Carlo simulation with random sampling using these MCSs for statistical uncertainty analysis. Statistical uncertainty analysis is usually included due to a lack of the precision in the failure rate data and a lack of the detailed understanding of modeled phenomena. The mean value of core uncovery frequency was 2.76×10^{-2}/yr, and its upper limit of 90% and 95% percentile points are 1.05×10^{-1}/yr and 1.26×10^{-1}/yr, respectively. These estimates are conditional on setting the LOCA frequency equal to 1 since detailed initiating event analysis was not performed; it was estimated to be a point value of about 5×10^{-9}/yr in the MNR SAR 2002 [3]. With these identified MCSs, importance analysis was conducted to rank the SSCs in terms of their contributions to the frequencies of accident sequences.

4.4 Limitations

Even though PRA has been applied in most of the nuclear power plants around the world due to the several strengths discussed above, there are several weaknesses present in issues of scope and modeling needs [10]. With respect to scoping issues, for example, low-power and shutdown modes of operation must be understood better than they are today. Also, there are modeling needs, especially in human reliability assessment or external event modeling (i.e., fire, flooding, etc.). Some of these weaknesses have been investigated extensively and improved greatly over the past decade. The issues of scope in the MNR may not be important compared to those in nuclear power plants. Research reactors run at low power (i.e., very low power density of the core) during normal operation. Thus they usually do not require any active systems to operate for low-power operation and at shutdown since reactors are safe if the core is kept covered. On the other hand, the issues of modeling needs, especially, the operators' interaction with the system during the accident progression need be better understood and analyzed. Since most of HRA methodologies were developed for the application in power reactors where most of manual actions are supported by automation, different HRA model may have to be applied for research reactors where most manual actions requires little cognitive loads but extensive manual execution. Therefore a time-oriented HRA approach is proposed herein.

5. Time-oriented HRA

MNR is not a power generating reactor in which most of the safety systems are automated. It is a pool-type research reactor. The automated system is limited mainly to reactor shutdown system since a pool-type research reactor is considered to have large safety margin after safe reactor shutdown in most accident scenarios. It requires manual actions during normal operation and emergencies for the process systems. Other necessary steps in the emergency preparedness plan should be executed manually, such as core relocation and water makeup in a LOCA scenario. Moreover, most HRA methods have been developed for the application in power reactors so that they are specialized in cognitive aspects of human performance (diagnosis and decision-making for required manual actions). However, operator mitigating actions in the MNR primarily require manual executions with little cognitive loads as explained above; operators can observe directly the accident progression since the MNR is an open pool-type reactor. Thus, HRA for these human factors during the operation of a plant under emergency conditions are different from that in power reactors. Herein a simple time-oriented HRA model was developed. Human performance is evaluated using this method, and its results were used in the PRA model for sensitivity analysis and quantification of HRA modeling uncertainty. Both results from the PRA model with conventional HRA and with time-oriented HRA are compared in the following sections.

5.1 Concept: simple time-oriented model

The assessment of human reliability depends on two competing variables: the required performance and the corresponding achieved performance [11]. This concept of requirement and performance was proposed for structural safety analysis where the resistance (R) of a structure and the applied load (S) are two competing quantities; if $S > R$, that structure will fail. It has been also applied in fire risk analysis in nuclear reactors; the competition of two processes in time (growth time of a fire and its suppression time by plant operators).

The application of this concept in human reliability is simple; the success or failure of the operator action in any circumstance is governed by the critical time (T_C) available for that response (i.e., before an undesired event occurs) and the time (T_A) required for the correct diagnosis of the situation and execution of the required action [12], as illustrated in Figure 3. These two competing times are random variables so

that human error probability (HEP) can be defined as the fraction of the time that T_A is greater than T_C by Equation (1),

$$\text{HEP} = Fr(T_A > T_C) = \int_0^\infty f_{T_C}(t)[1 - F_{T_A}(t)]dt \tag{1}$$

where $f_{T_C}(t)$ denotes the probability density function for the stochastic variability of the critical time (T_C) and $F_{T_A}(t)$ denotes the cumulative probability distribution for the stochastic variability of operator response time (T_A). The current approach is slightly different from commonly-used HRA methods of THERP and ASEP which decompose a situation into sub-tasks up to a defined degree of resolution of the action tree; note that a time-reliability correlation (TRC) as shown in Figure 3 (A) is used only for human performance of a diagnosis phase in these methods. The method used herein is a holistic method which assesses the entire situation without distinguishing between different tasks in a given situation and thus is similar to the human cognitive reliability (HCR) model [13]. However, the critical time was estimated as a point value in both TRC and HCR (see Figure 3 (A)). In order to estimate HEP by Equation (1), therefore, three elementary problems must be solved:

- Estimation of stochastic distributions for T_C and thus the probability density function of $f_{T_C}(t)$.
- Estimation of stochastic distributions for T_A and thus the cumulative probability distribution of $F_{T_A}(t)$.
- Combination of these two competing quantities by Equation (1) to obtain the stochastic and state-of-knowledge distribution of HEP.

In order to obtain the $f_{T_C}(t)$ distribution, the response surface method (RSM) was applied. Although there are several best estimate methods proposed for reactor safety studies to estimate safety margin, the RSM can generate the dataset for estimating the parameter of interest with relative ease and good accuracy. For the $F_{T_A}(t)$ distribution, important quantities of the operator response time (i.e., mean and standard deviation) were obtained through the interview with the operators and their simulation exercise. These values could be used to fit parametric probability distribution functions (PDFs) to present the stochastic variation of the operators' response time. With the distributions of two competing variables, the stochastic and state-of-knowledge distribution of HEP can be estimated.

5.2 Estimation of phenomenological time

The physical processes in complex engineered systems such as nuclear reactors are extremely complicated, and thus significant uncertainty for the estimation of the parameters of interest is inevitable. These uncertainties have been addressed by the best estimate method using deterministic codes (i.e., neutronic and/or thermal-hydraulic analysis). To express the uncertainty of the physical parameters (i.e., peak cladding temperature or core uncovery time) in reactor safety analysis, Monte Carlo simulation and/or RSM could be used to estimate the probability distribution of these parameters. For the RSM used in present study, a simple polynomial is constructed as a function of input parameters to obtain the distribution of the selected output parameter (time to activation of multiple radiation alarms on which operators should be evacuated from the reactor building). The coefficients in this function are estimated by the output data of a few simulation runs of deterministic codes at selected knot-points. Generally, the coefficients are obtained through least-square fitting and then Monte Carlo simulation can be run using this replacement polynomial model with the samples taken from the distributions of the input parameters using random sampling or Latin Hypercube Sampling; for the present study, 2,000 samples were taken by Latin Hypercube Sampling [14]. This approach can reduce the cost of extensive simulation but introduces another uncertainty; the prediction by deterministic code may not agree with that produced by a RSM

technique. Therefore, the comparison of both results at selected points ensured that their difference is indeed negligible.

The output data of the time to activation of multiple radiation alarms should be fitted to an appropriate PDF for the $f_{T_C}(t)$ estimation. The summary statistics of skewness (β_1) and kurtosis (β_2) for 2,000 datasets were 0.004 and 2.853, respectively. This shows that the data are fairly symmetric with slightly larger peakness than the normal distribution. The (β_1, β_2) plot (see Figures 6.1 and 6.2 in Reference 15) suggests that possible candidates of the PDF would be normal, lognormal or Johnson Sb distribution. In order to select the PDF among these three distributions, GOF tests (i.e., χ^2-test, Komogorov-Smirnov (KS) test, Anderson-Darling (AD) test [16]) could be conducted. Even though χ^2-test can apply for discrete and continuous probability distributions, it requires datasets to be divided into several intervals (bins) which could lead to loss of some information, thereby being sensitive to the choice of bins. Therefore, only KS and AD tests were implemented in this study. Both tests are based on order statistics and apply only for continuous probability distribution. The KS test is a non-parametric and distribution-free test, but tends to be more sensitive at the center of the distribution than the tails. Thus the AD test was supplemented since it normally gives more weight to the tails of the distribution. The summary statistics of these GOF tests are listed in Table 1. It shows that the best-fitting PDF is the Johnson Sb distribution but the other two PDFs could be adequately fitting the dataset. Therefore, these two PDFs are used for sensitivity analysis for HEP estimation.

Table 1 Goodness-of-fit (GOF) test for time to activation of multiple radiation alarms

GOF technique	KS test		AD test	
Null Hypothesis (H_0)	α	Conclusion	α	Conclusion
Normal distribution	0.83	Accept H_0 only at 5%LS	1.35	Reject H_0 at all LS
Lognormal distribution	0.92	Accept H_0 only at 2.5% LS	1.68	Reject H_0 at all LS
Johnson Sb distribution	0.48	Accept H_0 only at 5% LS	0.97	Accept H_0 only at 2.5% LS

LS denotes Level of Significance and α denotes the probability of making type I error (reject H_0 when H_0 is true); critical value of α_c for normality is 0.895 at 5%LS, 0.995 at 2.5% LS, and 1.035 at 1%LS for KS test, and 0.752 at 5%LS, 0.873 at 2.5% LS, and 1.035 at 1%LS for AD test. If calculated $\alpha<\alpha_c$, accept H_0 at the given LS where α_c is calculated. Otherwise, reject H_0 at that LS.

5.3 Estimation of performance time

The time for operators to perform the core relocation (T_A) was obtained from the interviews with the operators in the MNR. It is normally provided with only summary statistics of average (mean) time and standard deviation (i.e., 25 ± 5 minutes). Note that the operators in the MNR rehearse the core relocation twice a year under normal operating conditions. This information is not realistic enough to represent the accident situation and thus these summary statistics should be adjusted to account for the accident situation. Also, from the task analysis for HRA, there are two precedent tasks of reactor scram and pool isolation, which requires a total about 10 minutes to execute; this time includes other intermediate transient tasks of communication, traveling time, etc during the execution of these tasks. The time-dependency for core relocation with these previous tasks may be too complicated to analyze exactly. Thus, to account for this time-dependency, the response time of the mean and standard deviation was changed over a reasonable interval. In this analysis, it is assumed that the mean response time may vary mainly due to the dependency of the previous tasks while its standard deviation may change due to variation of operator performance (i.e., performance shaping factors accounting for the accident situation). Generally, the operator response time has been expressed using the lognormal or Weibull distribution [13].

In order to fit the given summary statistics to these distributions, the simple method of moment matching was used.

5.4 HEP estimation

From the estimated distributions of T_A and T_C, the HEP for core relocation using Equation (1) was evaluated. For a given lognormal distribution for T_A, different distributions for T_C were investigated for the sensitivity of the choice of the PDFs describing phenomenological time: Johnson Sb, lognormal, and normal distributions. The estimated HEPs are summarized in Table 2. It is observed that the choice of the specific PDF does not affect the HEP evaluation by equation (1), which is anticipated. As long as the intercept of two PDFs is not different significantly due to the choice of T_C distribution, HEP is basically evaluated from the T_A distribution alone (upper tail area of the distribution). This is shown as a significant variation in the estimated HEPs for various combinations of μ and σ for a given specific distribution; μ and σ can be considered to affect the location and shape of the distribution for the operator response time.

Table 2 Estimated Human Error Probabilities (HEPs) for combination of lognormal distribution for operator response time and various probability distributions for phenomenological time

T_A Distribution	Johnson Sb			Lognormal			Normal		
σ [min] / μ [min]	5	10	15	5	10	15	5	10	15
30	0	4.5E-04	3.6E-02	0	4.9E-04	3.6E-02	0	3.7E-04	3.6E-02
35	0	1.5E-02	5.2E-02	0	1.5E-02	5.2E-02	0	1.5E-02	5.2E-02
40	0	3.0E-02	7.8E-02	0	3.0E-02	7.8E-02	0	3.0E-02	7.8E-02

Note that μ and σ are mean and standard deviation for the operator response time.

In order to investigate the sensitivity of the PDF choice for the operator response time on the HEP estimation, the Weibull distribution for T_A was selected. The results of the estimated HEPs are listed in Table 3. It shows the same results that the PDF choice for the phenomenological time does not affect the estimated HEPs significantly while the value of μ and σ for the operator response time does. The influence of the PDF choice of the operator response time on the HEP estimation can be observed in the comparison of both Tables 2 and 3. The case of Weibull distribution for operator response time gives slightly a smaller value of estimated HEPs than that of lognormal distribution in each corresponding case, but their absolute difference is negligible. This lower HEP is a result of the Weibull distribution having a slightly lighter tail area than the lognormal distribution for given data (μ and σ). Overall, it is observed that the case of the lognormal distribution for operator response time gives a slightly conservative HEP estimation than that of the Weibull distribution.

Table 3 Estimated Human Error Probabilities (HEPs) for combination of Weibull distribution for operator response time and various probability distributions for phenomenological time

T_A Distribution	Johnson Sb			Lognormal			Normal		
σ [min] / μ [min]	5	10	15	5	10	15	5	10	15
30	0	4.5E-08	2.8E-02	0	4.9E-08	2.8E-02	0	4.1E-08	2.8E-02
35	0	8.4E-08	4.0E-02	0	9.2E-08	4.0E-02	0	7.4E-08	4.0E-02
40	0	4.9E-07	6.9E-02	0	5.4E-07	6.9E-02	0	4.1E-07	6.9E-02

5.5 Comparison with ASEP approach

For the comparison of the HEPs for the core relocation estimated by the ASEP approach and the current approach, the combination of the lognormal distribution and the Johnson Sb distribution was selected. The choice of the lognormal distribution was explained above and can be reinforced by the fact that the lognormal distribution can describe the operator's response time more appropriately than the Weibull distribution from the simulation data obtained at Sandia National Laboratories [17]. The Johnson Sb distribution describes best the time to activation of multiple radiation alarms as shown in Table 1.

A total of twenty five cases for the combinations of μ and σ in the range of μ = 30~40 minutes and σ = 10~15 minutes were generated and the HEPs in each case were evaluated by Equation (1). Note that the σ range was chosen by considering the original value of 5 minutes (i.e., under normal conditions) but it should be larger than that value to account for accident situations (i.e., doubling rule for this case which is a common practice in HRA implementation). The lognormal approximation for the input in the fault tree with these estimated HEPs was evaluated, and is shown graphically in Figure 5. The GOF test (KS test) shows that lognormal distribution could describe the HEPs reasonably well since $\alpha = 0.778 < 0.895$ (= α_c at 5% LS), so that the hypothesis of a lognormal distribution could be accepted to 5% level of significance. Note that this lognormal approximation gives a very conservative HEP value, especially in the upper percentile region. This is an important fact in PRA data analysis.

The median and error factor (EF) for the HEP estimated by the present method give 2.5E-02 and 4.9, respectively. The median value is smaller than that from the ASEP approach (median = 5.0E-02, EF = 5.0) by the factor of 2. This is anticipated since the ASEP approach normally is considered to give a conservative HEP estimation. These values were used in the PRA model for the sensitivity analysis of different modeling of human performance and its results are summarized in Table 4. The resulting frequencies (mean and two percentile points) of core uncovery for LOCA are decreased by a factor of 1.6. This is due to the fact that three of the MCSs among the most contributing minimal cut-sets to the frequency of accident sequence (core uncovery) include the basic event of human error for core relocation.

Table 4 Result of sensitivity analysis and modeling uncertainty analysis for the frequency of core uncovery in MNR LOCA

	Mean	Upper 90%	Upper 95%
Core uncovery frequency with the ASEP approach	2.76E-02/yr	1.05E-01/yr	1.26E-01/yr
Core uncovery frequency with the present approach	1.85E-02/yr	6.38E-02/yr	7.67E-02/yr

6. Conclusion

In the present study, the level 1 PRA for LOCA in the MNR was conducted. In order to support the analysis, event sequence development and system modeling, and human reliability analysis by the ASEP approach were completed, and the accident sequences were identified and quantified. Since the operator performance in research reactors is significantly different from that in power reactors, a different time-oriented HRA model was proposed. For the implementation of the proposed HRA method in the case study of core relocation, the phenomenological time was estimated by best estimate method (RSM) and the performance time for operator response time was obtained from interviews. The probability distributions describing these two time variables were selected through goodness-of-fit test. From these two competing quantities, the human error probability (HEP) for core relocation was evaluated. This HEP estimate was less than that by the ASEP approach by a factor of about 2; this agrees with the fact that the HEP value estimated by the ASEP approach is very conservative. Both HEP estimates were used for

sensitivity analysis, and modeling uncertainty in the PRA models was quantified; core uncovery frequencies from both models were different by a factor of 1.6. This shows the necessity of appropriate human reliability models in probabilistic risk assessment for research reactors. The proposed HRA model could be applied for human performance involving extensive manual execution without the heavy burden of operators' diagnosis and decision-making, which is typical of the operations in research reactors. This method could be also used for the recovery activities outside the control room in power reactors. The result could be used to quantify modeling uncertainty of human reliability in the PRA models.

7. Acknowledgement

The findings and technical description of the MNR for the present project came from the MNR-SAR-2002 and its supporting documents. These documents were obtained mostly through Mr. Mike Butler and MNR operators. His technical advice on the normal and emergency operation of the MNR is greatly appreciated.

8. Reference

1. USNRC, "Reactor safety study-an assessment of accident risks in U.S. commercial nuclear reactors", *WASH-1400 (NUREG-75/014)*, 1975.
2. T. Ha, "Overview of Probabilistic Risk Assessment", 30th annual CNS/CAN Student Conference, Toronto, 2006.
3. McMaster Nuclear Reactor, "McMaster Nuclear Reactor safety report", *MNR-SAR-2002*
4. D. Gilbert, Wm. J. Garland, and T. Ha, "MNRSIM: An interactive visual model which links thermal hydraulics, neutron production and other phenomena", *In Sixth International Conference on Simulation Methods in Nuclear Engineering*, 2004
5. T. Ha, "Probabilistic Risk Assessment in MNR", PhD Thesis, McMaster University, 2006.
6. D. Gertman, and H. Blackman, "Human reliability and safety analysis data handbook", John Wiley and Sons: New York, 1993.
7. A.D. Swain and H. Guttmann, "Handbook for human reliability analysis with emphasis on nuclear power plant applications," *NUREG/CR-1278*, USNRC, 1983
8. A.D. Swain, "Accident Sequence Evaluation Program Human Reliability Analysis Procedure", *NUREG/CR-4772*, USNRC, 1987.
9. FaultTree+ for Windows 6.05, "Fault and Event Tree Analysis Program", Isograph Limited, 1995.
10. G. Apostolakis, "On PRA", *Nuclear News*, March 2000.
11. M. Jae, "Human reliability analysis using reliability physics models", *J. of the KIIS*, Vol 17, No 3, 2002.
12. G. Apostolakis, V.M. Bier and A. Mosleh, "A critique of recent models for human error rate assessment", *Reliability Engineering and System Safety*, 22, pp. 201-217, 1988.
13. P. Moieni, A.J. Spurgin, and A. Singh, "Advances in human reliability analysis methodology. Part I: Framework, models and data", *Reliability Engineering and System Safety*, 44, pp. 27-55, 1994.
14. R.L. Iman, and M.J. Shortencarier, "A FORTRAN 77 program and user guide for the generation of Latin Hypercube and random samples for use with computer models", *SNL, NUREG/CR624*, 1994.
15. G.J. Hahn and S.S. Shapiro, "Statistical models in engineering", John Wiley and Sons: New York, 1967.
16. R. B. D'Agostino and M. A. Stephens, "Goodness-of- technique", Marcel Dekker Inc., New York, 1986
17. E.M. Dougherty, Jr. and J.R. Fragola, "Human reliability analysis: A systems engineering approach with nuclear power plant application", John Wiley and Sons: New York, 1987.

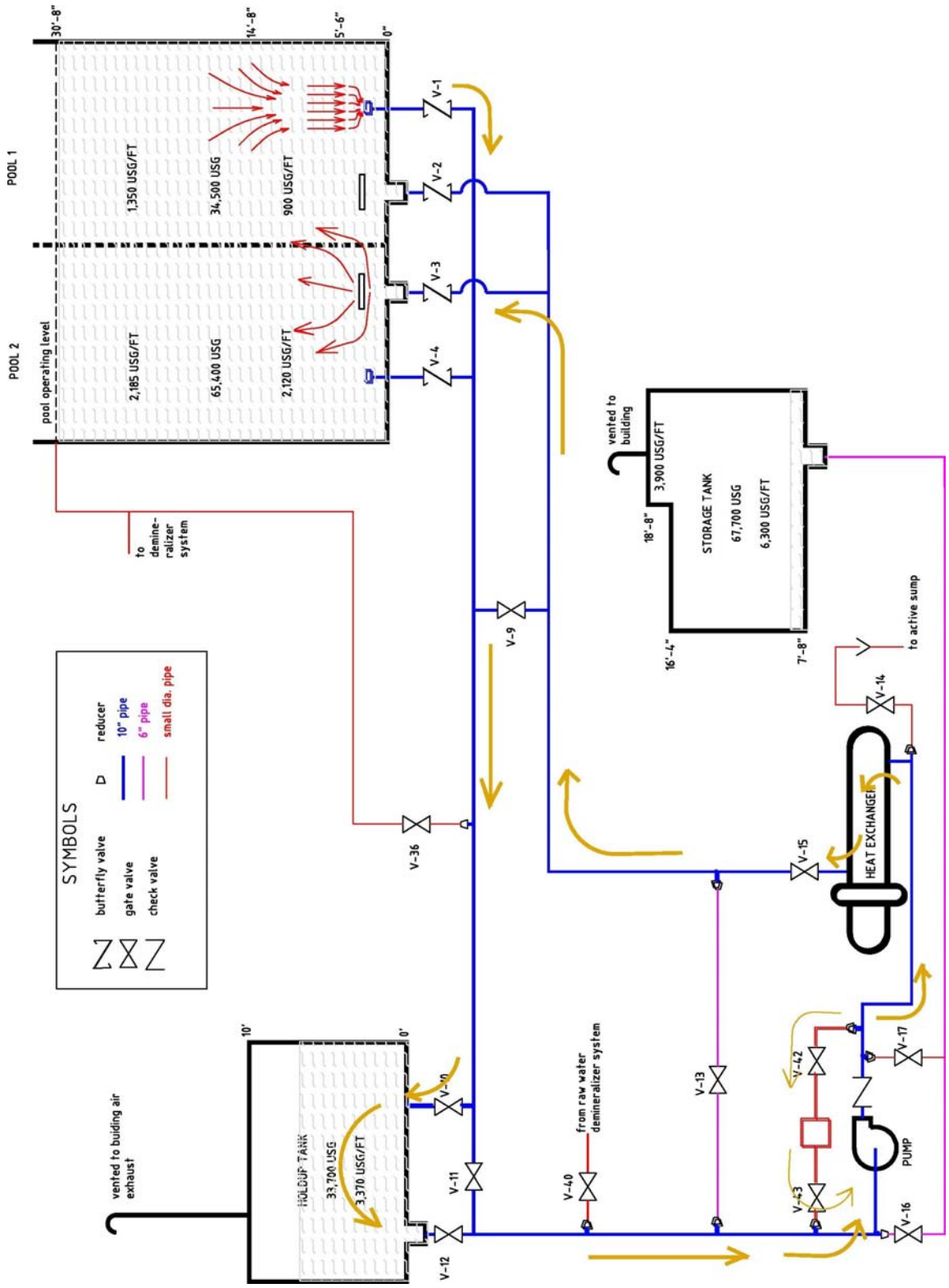

Figure 1 MNR heat transport system

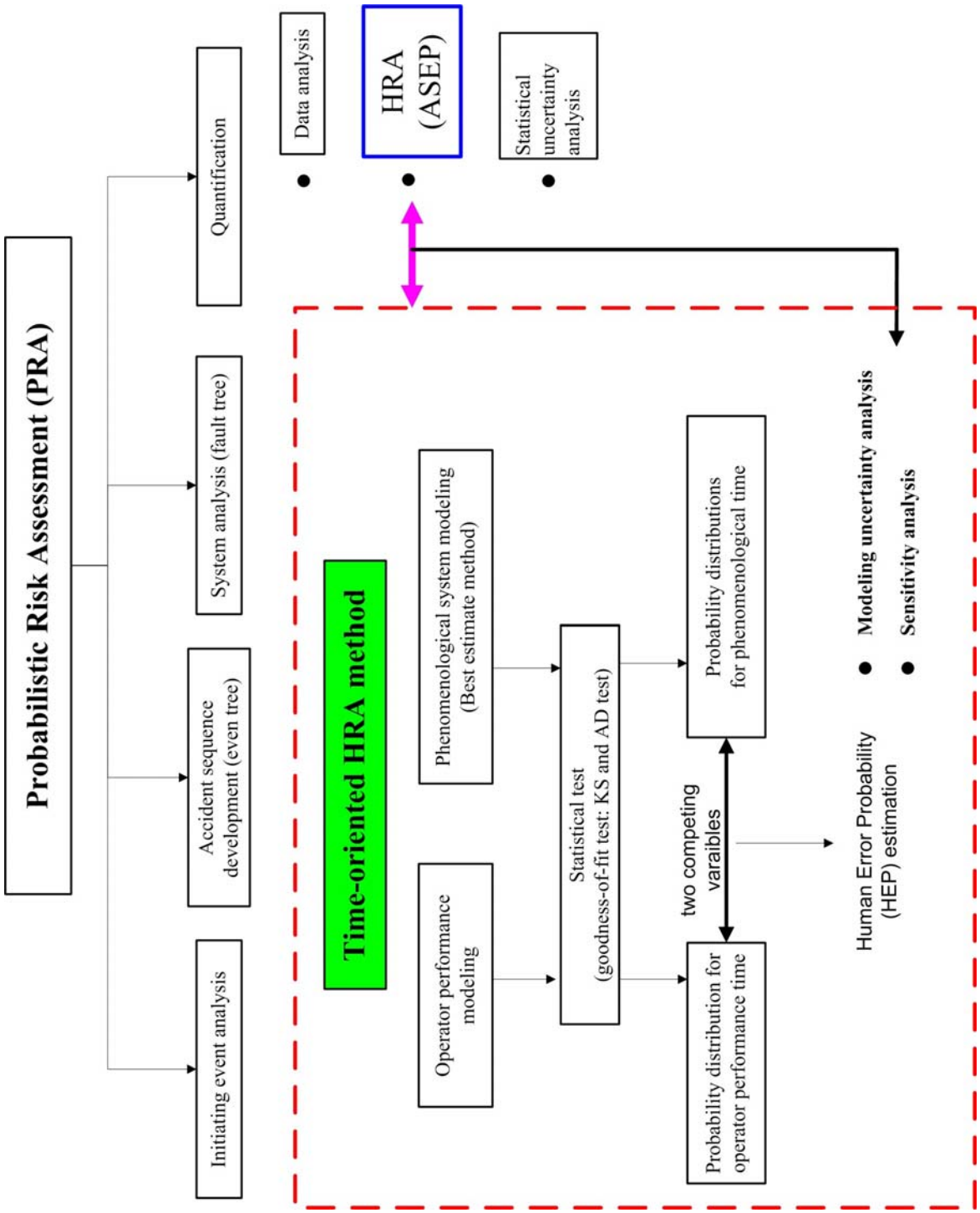

Figure 2 **Scope and methodology overview of present study**

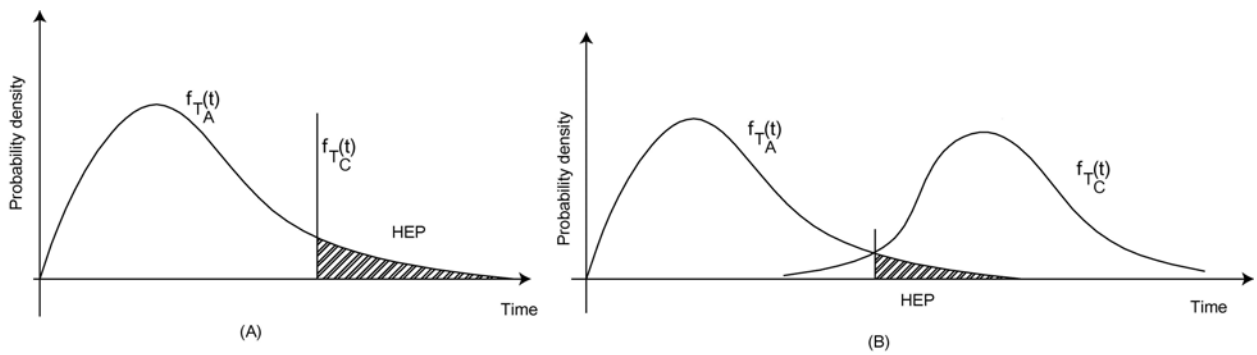

Figure 3 Conceptual definition of human error probability

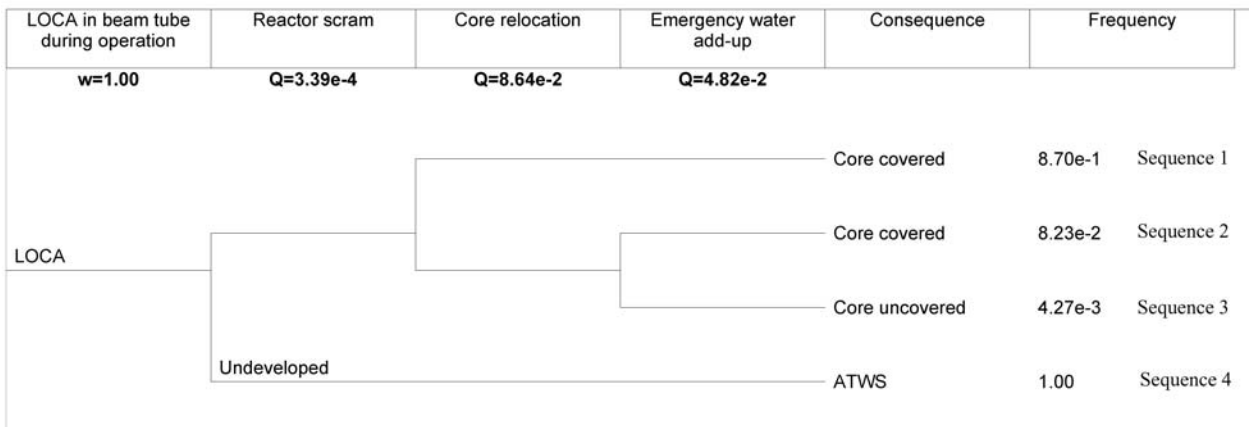

Figure 4 Event tree for LOCA-induced by beam tube rupture

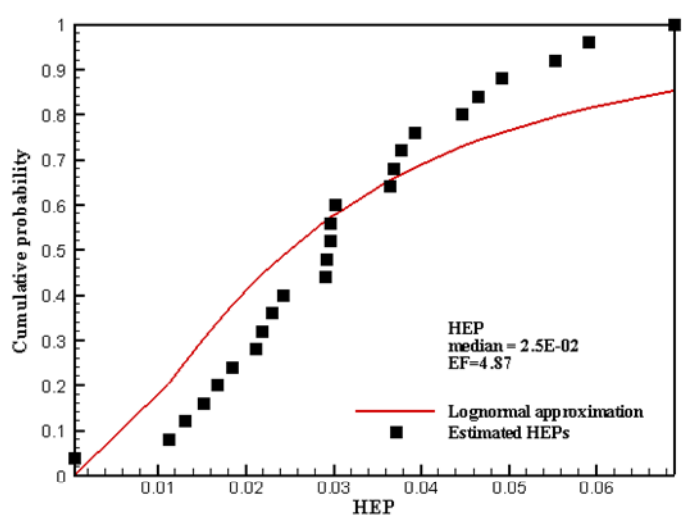

Figure 5 Lognormal approximation of estimated human error probabilities for core relocation